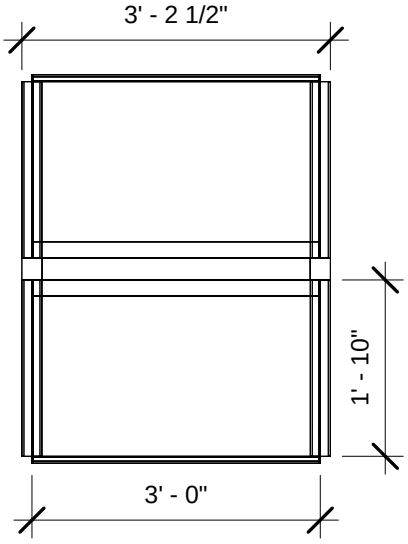

PLAN

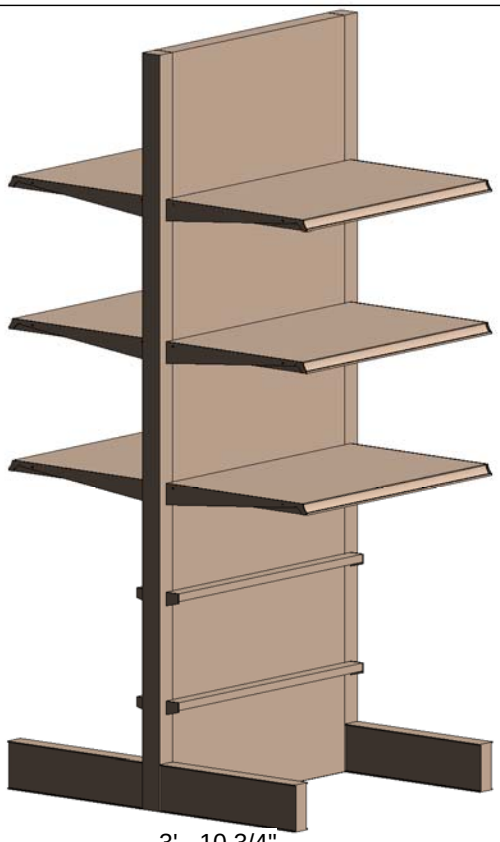

3D PERSPECTIVE

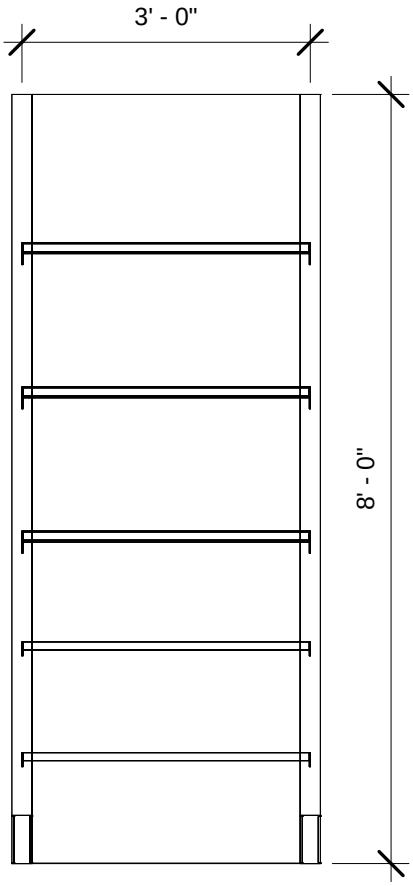

FRONT ELEVATION

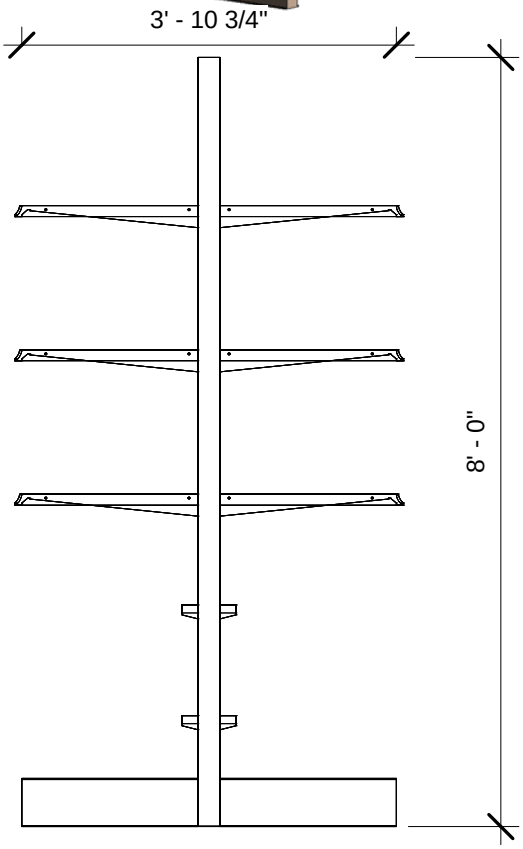

SIDE ELEVATION

Maxi Integrated Pallet System Starter

madix
INNOVATION ON DISPLAY

www.madixinc.com

Madix Revit Family

Architectural View

Project number	12056-150	MS1
Date	7-9-12	
Drawn by	AS	
Checked by	ND	Scale 1/2" = 1'-0"

7/9/2012 10:25:35 AM