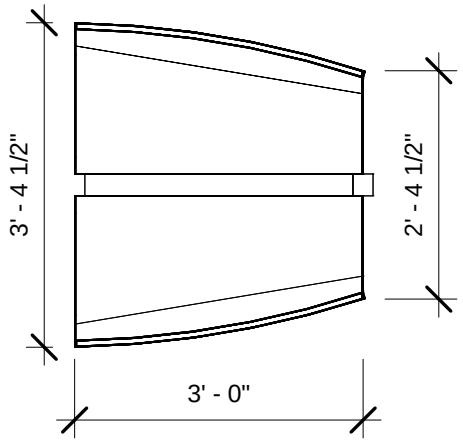

PLAN

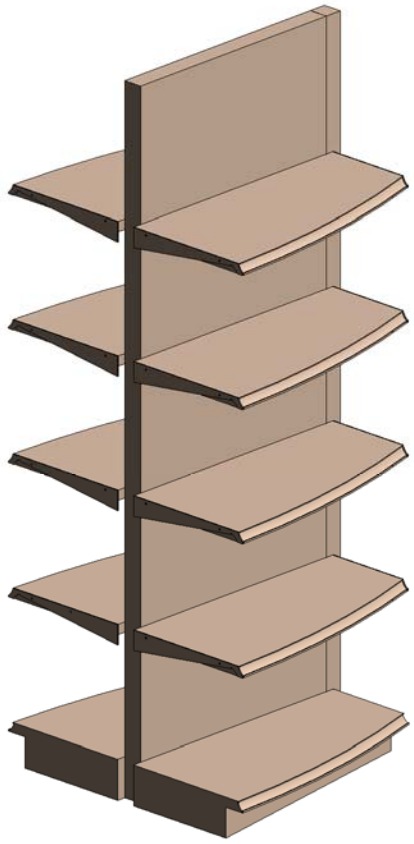

3D PERSPECTIVE

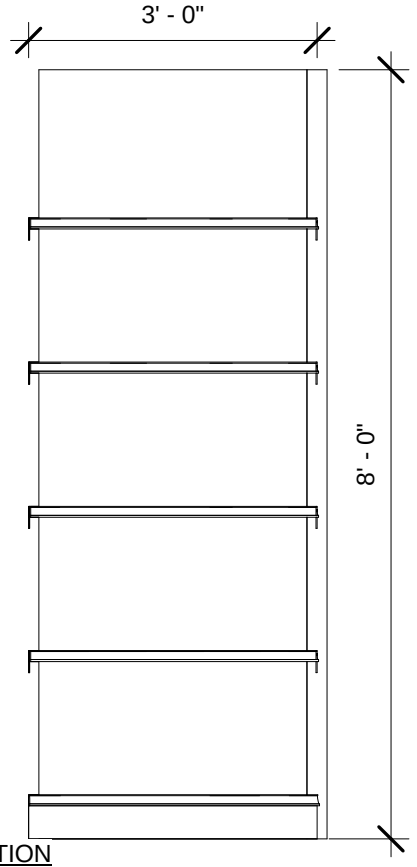

FRONT ELEVATION

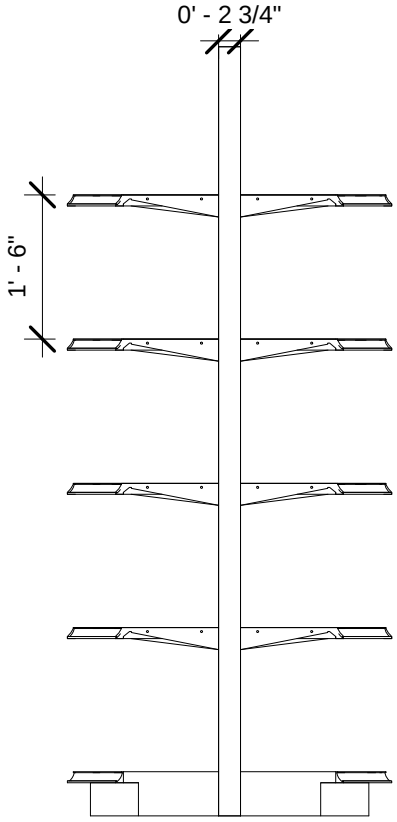

SIDE ELEVATION

Half Radius Convex Big to Small

madix INNOVATION ON DISPLAY	Madix Revit Family	Architectural View	
www.madixinc.com		Project number 12056-150	ML16
		Date 6-19-12	
		Drawn by AS	
		Checked by ND	Scale 1/2" = 1'-0"

6/19/2012 2:34:06 PM