BSSIL - STRAIGHT IN LOCKING BASE SHOE

ASY1-075

INSTALLATION INSTRUCTIONS

Insert the base shoe into the upright. Engage the latch by pushing it into the slot of the upright.
The latch must be completely engaged in the slot before installing the base shelves!

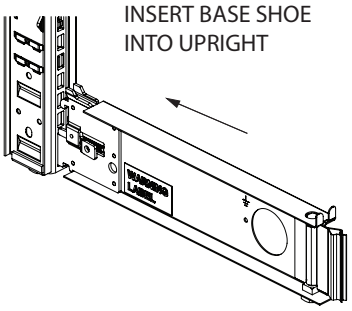

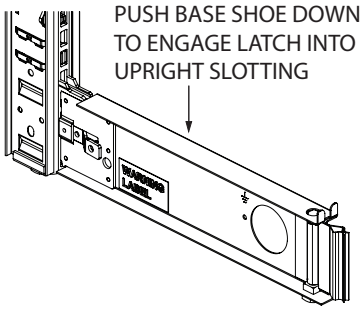

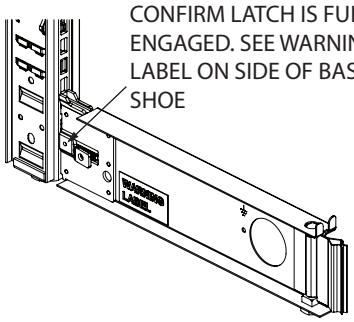

NOTE!

SEE WARNING LABEL ON BASE SHOE!

WARNING! / AVISO!

SHELVING SYSTEM MAY COLLAPSE IF BASE SHOE IS NOT INSTALLED PROPERLY! LATCH MUST BE COMPLETELY ENGAGED AND PIN HOLES MUST ALIGN TO ALLOW THE PROVIDED PIN TO BE INSERTED!

INSTALLATION: INSERT SHOE INTO BASE OF UPRIGHT AND PRESS DOWN UNTIL LATCH ENGAGES

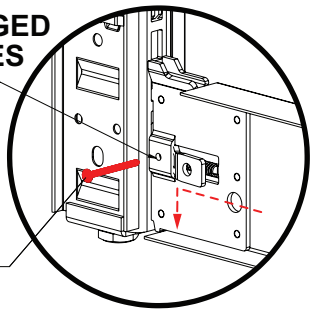

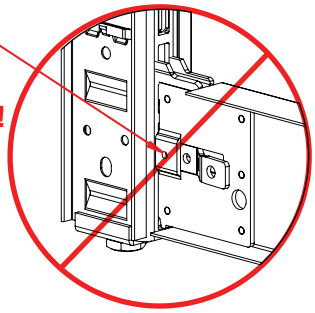

madix™ STORE FIXTURES
P.O. BOX 729 / TERRELL, TEXAS 75160 / 972.563.5744 / 800.776.2349
P.O. BOX 177 / GOODWATER, ALABAMA 35072 / 256.839.6354 / 800.633.6282

REV 02

REV#	ECN#	REVISION	BY	DATE
02	2*23114	UPDATED LABEL VIEWS, ADDED VIEWS	CAB	9/25/2020

REV#	ECN#	REVISION	BY	DATE