PLUG MOLD

ASY1-070

INSTALLATION INSTRUCTION

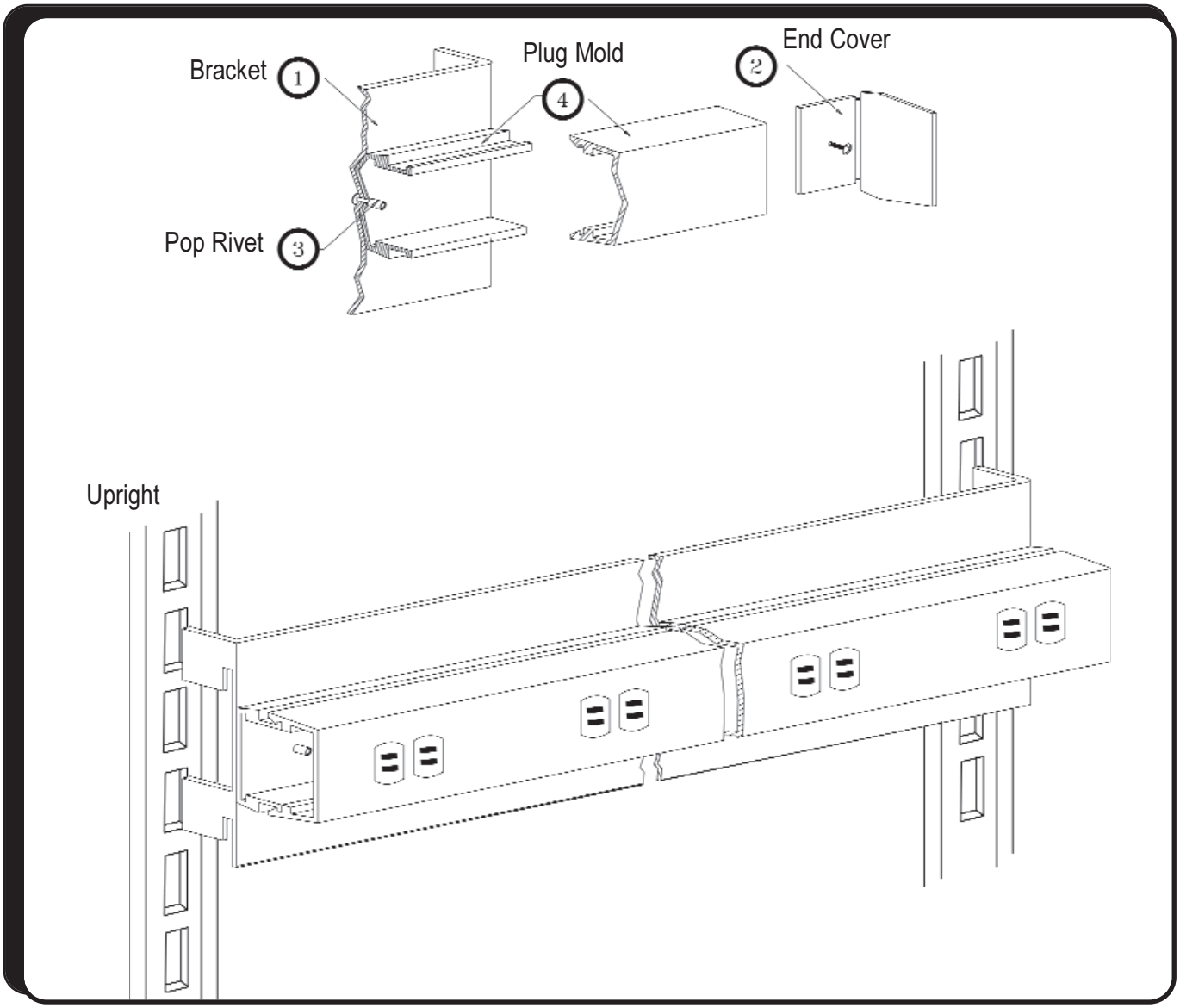

1 NOTE! The Plug Mold system installs into the uprights and is wired by a local electrician.

Madix Store Fixtures does not provide electrical services.

madix™ STORE FIXTURES
P.O. BOX 729 / TERRELL, TEXAS 75160 / 972.563.5744 / 800.776.2349
P.O. BOX 177 / GOODWATER, ALABAMA 35072 / 256.839.6354 / 800.633.6282

REV C

REV#	ECN#	REVISION	BY	DATE
C		Added Outlets	MMH	10/22/01

REV#	ECN#	REVISION	BY	DATE